E-series 4x4

B30E | B45E | B60E | Mk 2.1

Articulated Dump Trucks

Stage IV/Tier 4f Certified

- No tyre scuff thus less tyre and road surface damage
- Smaller turning circle than the associated 6x6 model
- Highly manoeuvrable in tight spaces
- Same payloads as 6x6 associated model

BELL

Technical Data

ENGINE
Manufacturer
Mercedes Benz

Model
OM936LA

Configuration
Inline 6, turbocharged and intercooled

Gross Power
246 kW (329 hp) @ 2 200 rpm

Net Power
236 kW (316 hp) @ 2 200 rpm

Gross Torque
1 300 Nm (958 lbft) @ 1 150 -1 800 rpm

Displacement
7,7 litres (469 cu.in)

Auxiliary Brake
Engine Valve Brake

Fuel Tank Capacity
302 litres (79.78 US gal)

AdBlue® Tank Capacity
31 litres (8.2 US gal)

Certification
OM936LA meets EU Stage IV / EPA Tier 4 Final emissions regulations.

TRANSMISSION
Manufacturer
Allison

Model
3500PR ORS

Configuration
Fully automatic planetary transmission with integral retarder.

Layout
Engine mounted

Gear Layout
Constant meshing planetary gears, clutch operated.

Gears
6 Forward, 1 Reverse

Clutch Type
Hydraulically operated multi-disc

Control Type
Electronic

Torque Control
Hydrodynamic with lock-up in all gears.

TRANSFER CASE
Manufacturer
Kessler

Series
W1400

Layout
Remote mounted

Gear Layout
Three in-line helical gears

Output Differential
Interaxle 33/67 proportional differential. Automatic inter-axle differential lock.

AXLES
Manufacturer
Bell

Model
Front: Bell 18T
Rear: Bell 36T

Front Differential
High input limited slip differential with spiral bevel gears.

Final Drive
Outboard heavy duty planetary on all axles.

BRAKING SYSTEM
Service Brake
Dual circuit, full hydraulic actuation wet disc brakes on all axles.

Maximum brake force:
263 kN (59 125 lbf)

Park & Emergency
Spring applied, air released driveline mounted disc.

Maximum brake force:
396 kN (89 000 lbf)

Auxiliary Brake
Automatic engine valve brake. Automatic, adjustable, integral, hydrodynamic transmission retarder. Output shaft speed dependent.

Total Retardation Power
Continuous: 318 kW (426 hp)
Maximum: 588 kW (788 hp)

WHEELS
Type
Radial Earthmover

Tyre
Front: 23.5 R25
Rear: 29.5 R25

FRONT SUSPENSION
Semi-independent, leading A-frame supported by hydro-pneumatic suspension struts.

Optional: Adaptive Comfort Ride suspension.

HYDRAULIC SYSTEM
Full load sensing system serving the prioritized steering, body tipping and brake functions. A ground-driven, load sensing emergency steering pump is integrated into the main system.

Pump Type
Variable displacement load sensing piston

Flow
165 l/min (44 gal/min)

Pressure
28 MPa (4 061 psi)

Filter
5 microns

STEERING SYSTEM
Double acting cylinders, with ground-driven emergency steering pump.

Lock to lock turns
4,1

Steering Angle
45°

DUMPING SYSTEM
Two double-acting, single stage, dump cylinders.

Raise Time
12 s

Lowering Time
6 s

Tipping Angle
70° standard, or any lower angle programmable.

PNEUMATIC SYSTEM
Air drier with heater and integral unloader valve, serving park brake and auxiliary functions.

System Pressure
810 kPa (117 psi)

ELECTRICAL SYSTEM
Voltage
24 V

Battery Type
Two AGM (Absorption Glass Mat) type.

Battery Capacity
2 X 75 Ah

Alternator Rating
28V 80A

VEHICLE SPEEDS

1st	7 km/h	4 mph
2nd	12 km/h	8 mph
3rd	19 km/h	12 mph
4th	27 km/h	17 mph
5th	39 km/h	24 mph
6th	45 km/h	28 mph
R	7 km/h	4 mph

CAB
ROPS/FOPS certified 74 dBA internal sound level measured according to ISO 6396.

Load Capacity & Ground Pressure

OPERATING WEIGHTS		GROUND PRESSURE		LOAD CAPACITY		OPTION WEIGHTS	
UNLADEN	kg (lb)	LADEN-No Sinkage		BODY	m³ (yd³)		kg (lb)
Front	10 453 (23 045)	23.5 R 25	kPa (Psi)	Struck Capacity	15 (19,5)	Extra wheelset:	
Rear	11 064 (24 392)	Front	278 (40)	SAE 2:1 Capacity	18,5 (24)	Front	565 (1 246)
Total	21 517 (47 437)			SAE 1:1 Capacity	21 (27,5)	Rear	937 (2 066)
		29.5 R25	kPa (Psi)				
LADEN		Rear	464 (67)	Rated Payload	28 000 kg		
Front	12 819 (28 261)				(61 729 lbs)		
Rear	36 698 (80 905)						
Total	49 517 (109 166)						

Dimensions

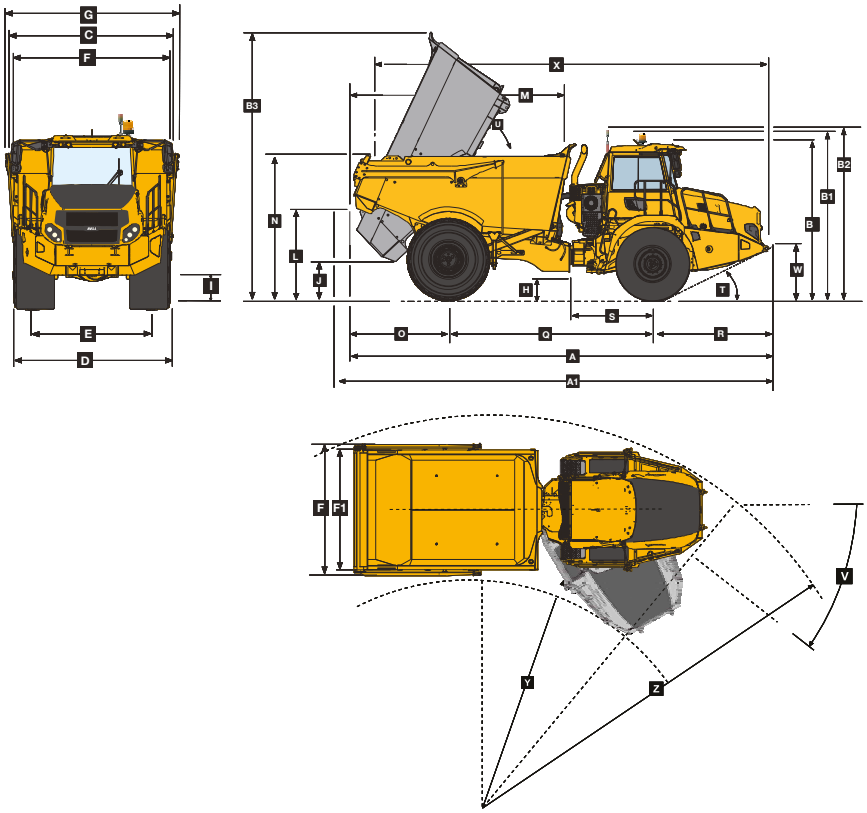

Machine Dimensions

A	Length - Transport Position	9 193 mm (30.16 ft.)
A1	Length - Bin Fully Tipped	9 675 mm (31.74 ft.)
B	Height - Transport Position	3 426 mm (11.24 ft.)
B1	Height - Rotating Beacon	3 661 mm (12.01 ft.)
B2	Height - Load Light	3 747 mm (12.29 ft.)
B3	Bin Height - Fully Tipped	5 397 mm (17.7 ft.)
C	Width over Mudguards	2 985 mm (9.79 ft.)
D	Width over Tyres - 23.5R25	2 940 mm (9.64 ft.)
D1	Width over Tyres - 29.5R25	3 141 mm (10.3 ft.)
E	Tyre Track Width - 23.5R25	2 356 mm (7.72 ft.)
E1	Tyre Track Width - 29.5R25	2 385 mm (7.82 ft.)
F	Width over Bin	3 140 mm (10.3 ft.)
F1	Width over Tailgate	3 453 mm (11.32 ft.)
G	Width over Mirrors - Operating Position	3 260 mm (10.69 ft.)
H	Ground Clearance - Artic	537 mm (1.76 ft.)
I	Ground Clearance - Front Axle	488 mm (1.6 ft.)
J	Ground Clearance - Bin Fully Tipped	374 mm (1.22 ft.)
L	Bin Lip Height - Transport Position	2 310 mm (7.57 ft.)
M	Bin Length	4 425 mm (14.51 ft.)
N	Load over Height	3 150 mm (10.33 ft.)
O	Rear Axle Centre to Bin Rear	2 093 mm (6.86 ft.)
Q	Rear Axle Centre to Front Axle Centre	4 565 mm (14.97 ft.)
R	Front Axle Centre to Machine Front	2 602 mm (8.53 ft.)
S	Front Axle Centre to Artic Centre	1 362 mm (4.46 ft.)
T	Approach Angle	25 °
U	Maximum Bin Tip Angle	70 °
V	Maximum Articulation Angle	45 °
W	Front Tie Down Height	1 075 mm (3.52 ft.)
X	Machine Lifting Centres	7 968 mm (26.14 ft.)
Y	Inner Turning Circle Radius - 23.5R25	3 526 mm (11.56 ft.)
Z	Outer Turning Circle Radius - 23.5R25	7 316 mm (24 ft.)

Gradeability/Rimpull

1. Determine tractive resistance by finding intersection of vehicle mass line and grade line. NOTE: 2% typical rolling resistance is already assumed in chart and grade line.
2. From this intersection, move straight right across charts until line intersects rimpull curve.
3. Read down from this point to determine maximum speed attained at that tractive resistance.

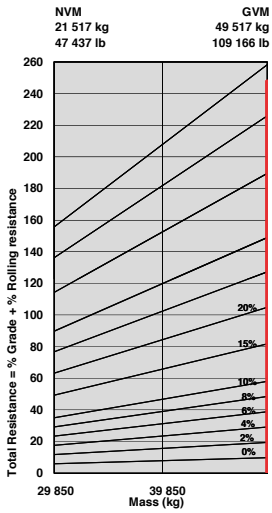

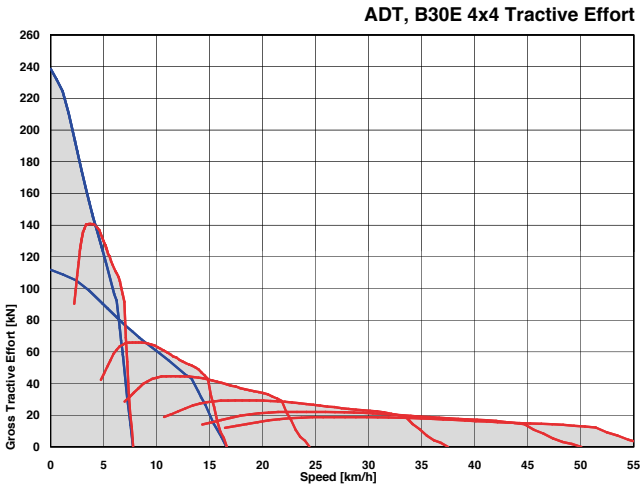

Retardation

1. Determine retardation force required by finding intersection of vehicle mass line.
2. From this intersection, move straight right across charts until line intersects the curve. NOTE: 2% typical rolling resistance is already assumed in chart.
3. Read down from this point to determine maximum speed.

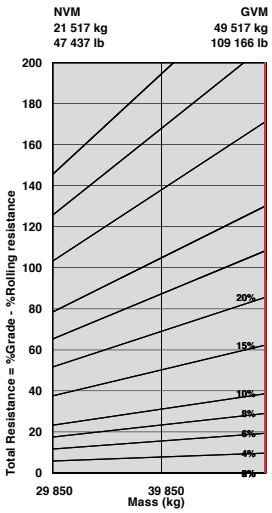

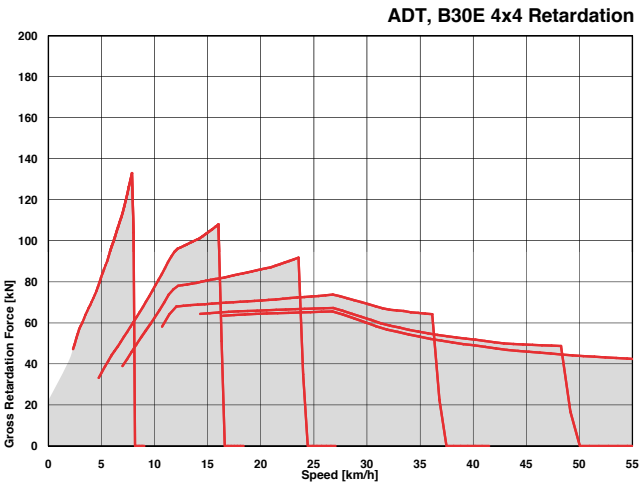

Welcome to the ... BELL Family

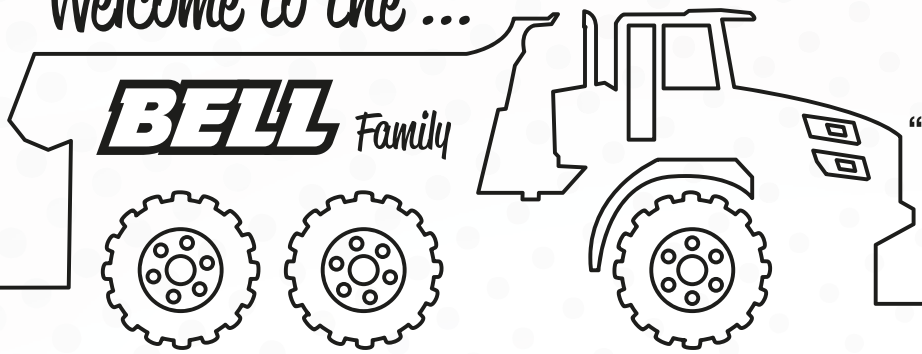

"Power up and plug in to our end-to-end customer solutions!"

START

Through our living motto **'Strong Reliable Machines, Strong Reliable Support'**, we offer both exceptional equipment and aftermarket support products because we want your Bell ownership experience to be a happy one.

SETTING YOU UP FOR SUCCESS

- TRAINING

PROTECTING YOUR ASSETS

- LUBECHECK
- MAINTENANCE CONTRACT
- EXTENDED WARRANTY
- FLEETM@TIC®

KEEPING YOUR MACHINE RUNNING

- LUBRICANTS
- TECHNICAL SUPPORT
- SPECIAL TOOLS
- PARTS
- BELL OUTLETS
- SERVICE KITS

GIVING YOU EXTRA VALUE, LONGER LIFE

- REMAN COMPONENTS
- PRE-OWNED EQUIPMENT

SUPPORTING YOU EVERY STEP OF YOUR BELL OWNERSHIP EXPERIENCE

Smarter fleet management

Cutting edge technology, helping you run your fleet smarter. Providing accurate, up-to-date operational data, production data and diagnostic data.

The key to a productive and profitable fleet, lies in the abillity to monitor and manage your machines and operators efficiently. Machine operational data is processed and compiled into useful production and performance statistics, accessible via the Bell Fleetm@tic® website. These reports are also automated and emailed directly to you. The two monitoring packages that we have available, are:

• **The Classic Package** supplies you with good enough information for you to have a very good understanding of how your machines is operating for each shift that it runs. This package comes standard with the machine for 2 years.

• **The Premium Package** is focused on customers who need to have extremely detailed information of the machine's operation. For this package we offer similar information to that of the Classic Package but for each individual laden - unladen cycle. In addition, live tracking is available on the Fleetm@tic® website on a per minute basis.

Fleetm@tic®:

- Maximise productivity
- Generate machine utilisation reports
- Identify operator training requirements
- Pro-active maintenance planning
- Receive machine health data
- Implement safety features
- Protect investments
- Receive real time geospatial data

Technical Data

ENGINE

Manufacturer
Mercedes Benz (MTU)

Model
OM471LA (MTU 6R 1300)

Configuration
Inline 6, turbocharged and intercooled

Gross Power
390 kW (523 hp) @ 1 700 rpm

Net Power
369 kW (495 hp) @ 1 700 rpm

Gross Torque
2 460 Nm (1 814 lbft) @ 1 300 rpm

Displacement
12,8 litres (781 cu.in)

Auxiliary Brake
Engine Valve Brake

Fuel Tank Capacity
352 litres (93 US gal)

AdBlue® Tank Capacity
40 litres (11 US gal)

Certification
OM471LA (MTU 6R 1300) is EU Stage IV / EPA Tier 4 Final emissions regulations.

TRANSMISSION

Manufacturer
Allison

Model
4700 ORS

Configuration
Fully automatic planetary transmission.

Layout
Engine mounted

Gear Layout
Constant meshing planetary gears, clutch operated.

Gears
7 Forward, 1 Reverse

Clutch Type
Hydraulically operated multi-disc

Control Type
Electronic

Torque Control
Hydrodynamic with lock-up in all gears.

TRANSFER CASE

Manufacturer
Kessler

Series
W2400

Layout
Remote mounted

Gear Layout
Three in-line helical gears

Output Differential
Interaxle 29/71 proportional differential. Automatic inter-axle differential lock.

AXLES

Manufacturer
Bell

Model
Front: Bell 30T
Rear: Kessler D106

Differential
Front: High input controlled traction Differential with spiral bevel gears.

Rear: Centre input open differential with spiral bevel gears.

Final Drive
Outboard heavy duty planetary on all axles.

BRAKING SYSTEM

Service Brake
Dual circuit, full hydraulic actuation wet disc brakes on front and rear axles. Wet brake oil is circulated through a filtration and cooling system.

Maximum brake force:
330 kN (74 187 lbf)

Park & Emergency
Spring applied, air released driveline mounted disc.

Maximum brake force:
379 kN (85 203 lbf)

Auxiliary Brake
Automatic engine valve brake. Automatic retardation through electronic activation of wet brake system.

Total Retardation Power
Continuous: 442 kW (593 hp)
Maximum: 854 kW (1 145 hp)

WHEELS

Type
Radial Earthmover

Tyre
Front: 775/65 R29 (26.5 R25 optional)
Rear: 21.00 R35 Dual

FRONT SUSPENSION

Semi-independent, leading A-frame supported by hydro-pneumatic suspension struts.

Optional: Electronically controlled adaptive suspension with ride height adjustment.

HYDRAULIC SYSTEM

Full load sensing system serving the prioritized steering, body tipping and brake functions. A ground-driven, load sensing emergency steering pump is integrated into the main system.

Pump Type
Variable displacement load sensing piston

Flow
330 L/min (87 gal/min)

Pressure
315 bar (4 569 psi)

Filter
5 microns

STEERING SYSTEM

Double acting cylinders, with ground-driven emergency steering pump.

Lock to lock turns
5

Steering Angle
42°

DUMPING SYSTEM

Two double-acting, two stage telescopic, dump cylinders.

Raise Time
13 s

Lowering Time
13 s

Tipping Angle
55° standard, or any lower angle programmable.

PNEUMATIC SYSTEM

Air drier with heater and integral unloader valve, serving park brake and auxiliary functions.

System Pressure
810 kPa (117 psi)

ELECTRICAL SYSTEM

Voltage
24 V

Battery Type
Two AGM (Absorption Glass Mat) type.

Battery Capacity
2 X 75 Ah

Alternator Rating
28V 80A

VEHICLE SPEEDS

1st	3.5 km/h	2,1 mph
2nd	8 km/h	5 mph
3rd	15 km/h	9 mph
4th	21 km/h	13 mph
5th	31 km/h	19 mph
6th	42 km/h	26 mph
7th	48 km/h	30 mph
R	6 km/h	3,7 mph

CAB

ROPS/FOPS certified 74 dBA internal sound level measured according to ISO 6396.

Load Capacity & Ground Pressure

OPERATING WEIGHTS		GROUND PRESSURE		LOAD CAPACITY		OPTION WEIGHTS	
UNLADEN	**kg (lb)**	**LADEN**		**BODY**	**m³ (yd³)**		**kg (lb)**
Front	17 548 (38 686)	**No Sinkage/Total Contact Area**		Struck Capacity	19,5 (25,5)	Bin liner	1 404 (3 095)
Rear	15 768 (34 762)	**26.5 R 25**	**kPa (Psi)**	SAE 2:1 Capacity	25 (33)	Tailgate	1 435 (3 16 3)
Total	33 316 (73 448)	Front	400 (58)	SAE 1:1 Capacity	29,5 (38)		
				SAE 2:1 Capacity			
LADEN		**775/65 R29**	**kPa (Psi)**	with Tailgate	26 (34)		
Front	22 190 (48 921)	Front	367 (53)				
Rear	52 126 (114 918)						
Total	74 316 (163 839)	**21.00 R35**	**kPa (Psi)**	Rated Payload	41 000 kg		
		Rear	419 (61)		(90 390 lbs)		

Dimensions

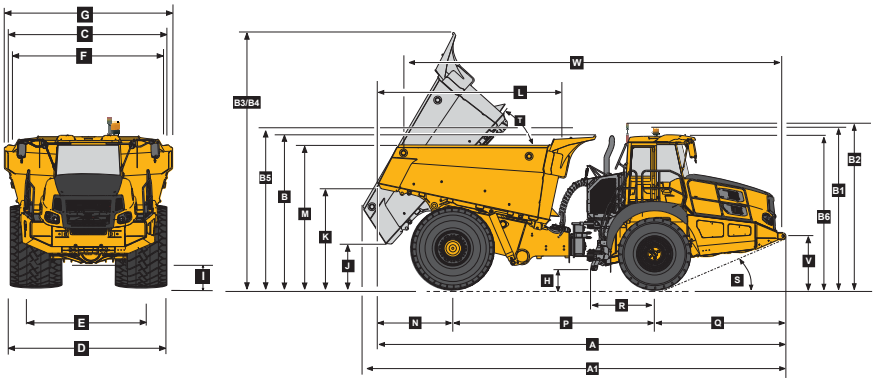

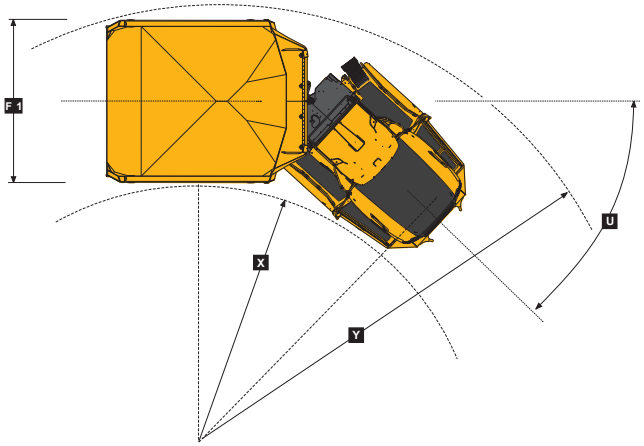

Machine Dimensions

A	Length - Transport Position with Tailgate	10 131 mm	(33.23 ft.)
A	Length - Transport Position w/o Tailgate	10 111 mm	(33.176 ft.)
A1	Length - Bin Fully Tipped	10 449 mm	(34.28 ft.)
B	Height - Transport Position w/o Rock Guard	3 864 mm	(12.67 ft.)
B	Height - Transport Position with Rock Guard	4 236 mm	(13.89 ft.)
B1	Height - Rotating Beacon	4 038 mm	(13 ft.3 in.)
B2	Height - Load Light	4 127 mm	(13 ft.6 in.)
B3	Bin Height - Fully Tipped w/o Rock Guard	6 200 mm	(20.34 ft.)
B4	Bin Height - Fully Tipped with Rock Guard	6 400 mm	(20.99 ft.)
B5	Height - Rock Guard Operating Position	4 236 mm	(13.89 ft.)
B6	Height - Cab	3 802 mm	(12 ft.6 in.)
C	Width over Mudguards	3 495 mm	(11 ft.6 in.)
D	Width over Front Tyres 775/65R29	3 690 mm	(12 ft.)
D1	Width over Front Tyres 26.5R25	3 425 mm	(11.2 ft.)
D	Width over Rear Tyres 21.00R35	3 960 mm	(13 ft.)
E	Tyre Track Width Front 775/65R29	2 905 mm	(9.5 ft.)
E1	Tyre Track Width Front 26.5R25	2 793 mm	(9.2 ft.)
E	Tyre Track Width Rear 21.00R35	2 677 mm	(8.8 ft.)
F	Width over Bin	4 265 mm	(14 ft.)
F1	Width over Tailgate	4 553 mm	(14.93 ft.)
G	Width over Mirrors - Operating Position	4 558 mm	(15 ft.)
H	Ground Clearance - Artic	545 mm	(21.46 in.)
I	Ground Clearance - Front Axle	543 mm	(21.34 in.)
J	Ground Clearance - Bin Fully Tipped	913 mm	(3 ft.)
K	Bin Lip Height - Transport Position	2 557 mm	(8.34 ft.)
L	Bin Length	4 559 mm	(14.96 ft.)
M	Load over Height	3 481 mm	(11.4 ft.)
N	Rear Axle Centre to Bin Rear	1 860 mm	(6.1 ft.)
P	Rear Axle Centre to Front Axle Centre	5 000 mm	(16.4 ft.)
Q	Front Axle Centre to Machine Front	3 256 mm	(10 ft.8 in.)
R	Front Axle Centre to Artic Centre	1 558 mm	(5 ft.1 in.)
S	Approach Angle		24 °
T	Maximum Bin Tip Angle		55 °
U	Maximum Articulation Angle		42 °
V	Front Tie Down Height	1 262 mm	(4 ft.2 in.)
W	Machine Lifting Centres	9 415 mm	(30.9 ft.)
X	Inner Turning Circle Radius	3 956 mm	(12.9 ft.)
Y	Outer Turning Circle Radius	8 655 mm	(28.4 ft.)

Gradeability/Rimpull

1. Determine tractive resistance by finding intersection of vehicle mass line and grade line. NOTE: 2% typical rolling resistance is already assumed in chart and grade line.
2. From this intersection, move straight right across charts until line intersects rimpull curve.
3. Read down from this point to determine maximum speed attained at that tractive resistance.

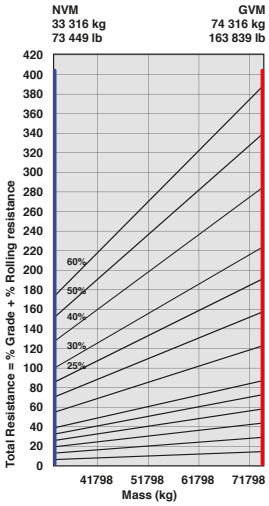

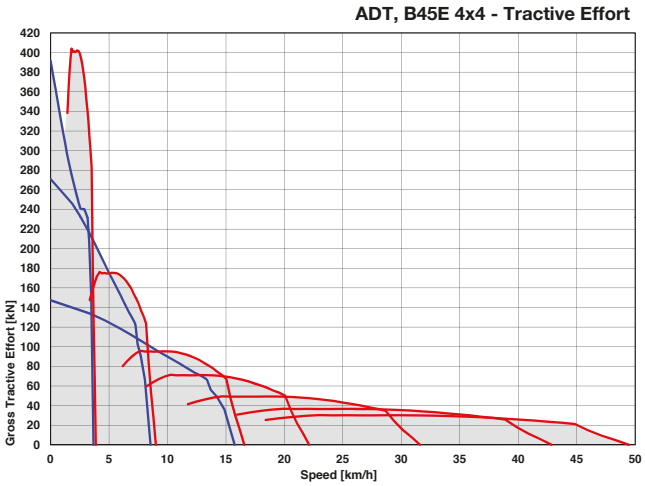

Retardation

1. Determine retardation force required by finding intersection of vehicle mass line.
2. From this intersection, move straight right across charts until line intersects the curve. NOTE: 2% typical rolling resistance is already assumed in chart.
3. Read down from this point to determine maximum speed.

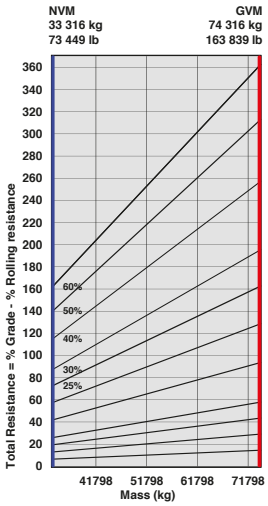

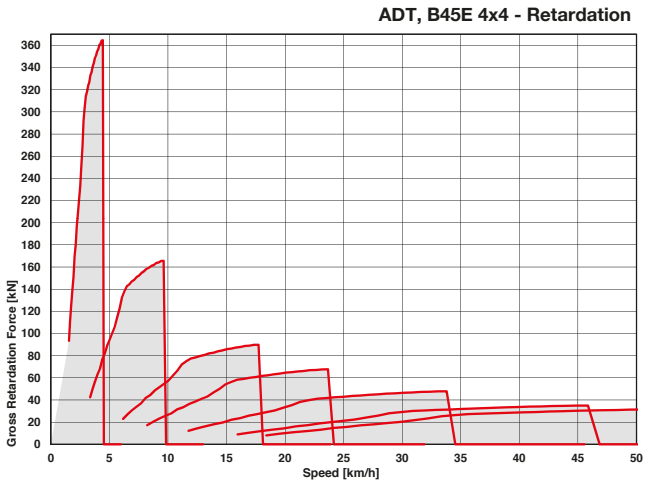

B60E All Wheel Drive

The Bell B60E offers our customers more tonnage than ever before, and at a related lower cost per tonne. It keeps all of the traditional Bell safety and productivity features while still offering off-road capability that non-ADT solutions cannot match.

Bell has a history of leading the ADT industry and offering our customers more in two distinct ways - through the innovations that we apply to our products and our principle that larger trucks give lower cost per tonne. These two factors are ideally combined in the B60E to give a real

At 35m³ this is the largest ADT bin in the world today. You can carry more material and make more money, it's that simple.

value adding package.

The Bell B60E has been developed as a result of the Bell tradition of listening to our customers. They were looking for a machine that would perform better than conventional haulage solutions in slippery and undulating conditions, but didn't need the 'go anywhere' ability of a 3 axle 6x6 ADT. In response Bell has filled this conspicuous gap in the market with the B60E crossover solution.

The B60E has been enthusiastically received, giving productivity during adverse weather conditions when other machines are unable to operate, and also tolerating less site maintenance, which has large cost and hassle implications for many sites.

- The oscillation joint is what makes an ADT. It keeps the wheels on the ground ensuring traction when driving over rough terrain. The B60E has inherited the oscillation joint of the B50E, which has been strengthened appropriately.
- Articulated steering between the front and rear chassis produces much tighter turning circles than a steered axle, and makes the B60E an ideal machine for tight sites.
- By configuring the driveline to direct drive to all wheels, the Bell B60E can go places where conventional trucks cannot.
- In deep soft mud it won't necessarily match its 3 axle counterparts but it has proven itself to be a more than capable machine in challenging conditions.

Technical Data

ENGINE

Manufacturer
Mercedes Benz (MTU)

Model
OM473LA (MTU 6R 1500)

Configuration
Inline 6, turbocharged and intercooled.

Gross Power
430 kW (577 hp) @ 1 700 rpm

Net Power
405 kW (543 hp) @ 1 700 rpm

Gross Torque
2 750 Nm (2 028 lbft) @ 1 300 rpm

Displacement
15,6 litres (952 cu.in)

Auxiliary Brake
Engine Valve Brake

Fuel Tank Capacity
494 litres (130 US gal)

AdBlue® Tank Capacity
40 litres (11 US gal)

Certification
OM473LA (MTU 6R 1500) meets EU Stage IV / EPA Tier 4 Final emissions regulations.

TRANSMISSION

Manufacturer
Allison

Model
4800 ORS

Configuration
Fully automatic planetary transmission

Layout
Engine mounted

Gear Layout
Constant meshing planetary gears, clutch operated

Gears
7 Forward, 1 Reverse

Clutch Type
Hydraulically operated multi-disc

Control Type
Electronic

Torque Control
Hydrodynamic with lock-up in all gears.

TRANSFER CASE

Manufacturer
Kessler

Series
W2400

Layout
Remote mounted

Gear Layout
Three in-line helical gears

Output Differential
Interaxle 29/71 proportional differential. Automatic inter-axle differential lock.

AXLES

Manufacturer
Front - Bell
Rear - Kessler

Model
Front: 30T
Rear: 71T

Differential
Front: High input controlled traction differential with spiral bevel gears

Rear: Centre input open differential with spiral bevel gears

Final Drive
Outboard heavy duty planetary on all axles.

BRAKING SYSTEM

Service Brake
Dual circuit, full hydraulic actuation wet disc brakes on front and rear axles. Wet brake oil is circulated through a filtration and cooling system.

Maximum brake force:
437 kN (98 242 lbf)

Park & Emergency
Spring applied, air released driveline mounted disc.

Maximum brake force:
379 kN (85 203 lbf)

Auxiliary Brake
Automatic engine valve brake. Automatic retardation through electronic activation of wet brake system.

Total Retardation Power
Continuous: 574 kW (770 hp)
Maximum: 983 kW (1 318 hp)

WHEELS

Type
Radial Earthmover

Tyre
Front: 875/65 R29
Rear: Twin 24.00 R35

FRONT SUSPENSION

Semi-independent, leading A-frame supported by hydro-pneumatic suspension struts. Suspension is electronically controlled adaptive suspension with ride height adjustment.

REAR SUSPENSION

Trailing arm cradle supported by hydro-pneumatic suspension struts, with an additional lateral stabiliser.

HYDRAULIC SYSTEM

Full load sensing system serving the prioritized steering, body tipping, suspension and brake functions. A ground-driven, load sensing emergency steering pump is integrated into the main system.

Pump Type
Variable displacement load sensing piston

Flow
330 L/min (87 gal/min)

Pressure
250 bar (3 626 psi)

Filter
5 microns

STEERING SYSTEM

Double acting cylinders, with ground-driven emergency steering pump.

Lock to lock turns
4,9

Steering Angle
42º

DUMPING SYSTEM

Two double-acting, two stage telescopic, dump cylinders.

Raise Time
17 seconds

Lowering Time
18 seconds

Tipping Angle
55 deg standard, or any lower angle programmable

PNEUMATIC SYSTEM

Air drier with heater and integral unloader valve, serving park brake and auxiliary functions.

System Pressure
810 kPa (117 psi)

ELECTRICAL SYSTEM

Voltage
24 V

Battery Type
Two AGM (Absorption Glass Mat) type.

Battery Capacity
2 X 75 Ah

Alternator Rating
28V 80A

MAX. VEHICLE SPEED

1st	4 km/h	2,5 mph
2nd	8 km/h	5,6 mph
3rd	16 km/h	10,6 mph
4th	21 km/h	13,7 mph
5th	30 km/h	20 mph
6th	41 km/h	27 mph
7th	47 km/h	32 mph
R	6 km/h	4 mph

CAB

ROPS/FOPS certified 74 dBA internal sound level measured according to ISO 6396.

Load Capacity & Ground Pressure

OPERATING WEIGHTS		GROUND PRESSURE*		LOAD CAPACITY		OPTION WEIGHTS	
UNLADEN	kg (lb)	LADEN		BODY	m^3 (yd^3)		kg (lb)
Front	20 211 (44 558)	(No sinkage/Total Contact Area Method)		Struck Capacity	27 (35,3)	Bin liner	1 116 (2 460)
Rear	22 265 (49 086)	875/65 R29	kPa (Psi)	SAE 2:1 Capacity	35 (45,8)	Tailgate	1 516 (3 342)
Total	42 476 (93 644)	Front	333 (48)	SAE 1:1 Capacity	42 (54,9)		
				SAE 2:1 Capacity			
LADEN		24.00 R35	kPa	with Tailgate	35,6 (46,6)	EXTRA WHEELSET	
Front	26 811 (59 108)	Rear	469 (68)			875/65 R29	1 024 (2 258)
Rear	70 665 (155 768)			Rated Payload	55 000 kg	24.00 R35	1 240 (2 734)
Total	97 476 (214 898)				(121 254 lb)		

* Front ground pressure calculated with Michelin XAD65-1 tyre. Rear ground pressure calculated with Michelin XDT B tyre.

Dimensions

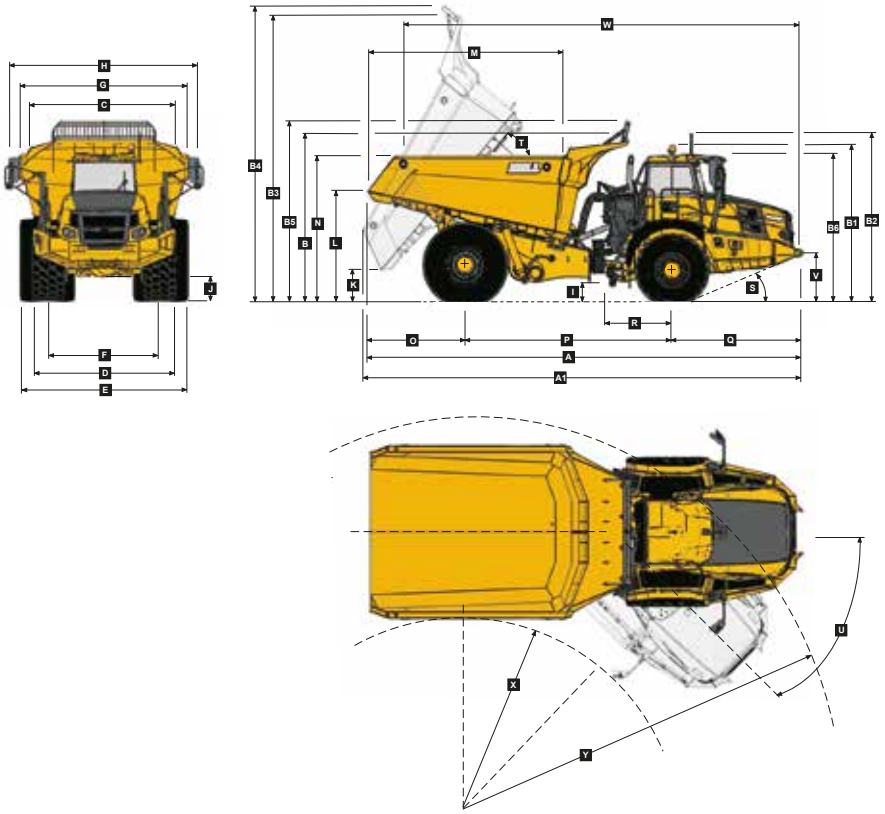

Machine Dimensions

A	Length - Transport Position	11 114 mm	(36 ft. 6 in.)
A1	Length - Bin Fully Tipped	11 178 mm	(36 ft. 8 in.)
B	Height - Transport Position w/o Rock Guard	4 209 mm	(13 ft.10 in.)
B	Height - Transport Position with Rock Guard	4 212 mm	(13 ft.10 in.)
B1	Height - Rotating Beacon	4 050 mm	(13 ft. 3 in.)
B2	Height - Load Light	4 333 mm	(14 ft. 2 in.)
B3	Bin Height - Fully Tipped w/o Rock Guard	7 476 mm	(24 ft. 6 in.)
B4	Bin Height - Fully Tipped with Rock Guard	7 692 mm	(25 ft. 3 in.)
B5	Height - Rock Guard Operating Position	4 675 mm	(15 ft. 4 in.)
B6	Height - Cab	3 813 mm	(12 ft. 6 in.)
C	Width over Mudguards	3 790 mm	(12 ft. 5 in.)
D	Width over Tyres - Front - 875/65 R29	3 832 mm	(12 ft. 7 in.)
E	Width over Tyres - Rear - 24.00R35	4 444 mm	(14 ft. 7 in.)
F	Tyre Track Width - Front	2 949 mm	(9 ft. 8 in.)
F	Tyre Track Width - Rear	2 992 mm	(9 ft. 10 in.)
G	Width over Bin	4 487 mm	(14 ft. 9 in.)
H	Width over Mirrors - Operating Position	5 242 mm	(17 ft. 2 in.)
I	Ground Clearance - Artic	561 mm	(22. 09 in.)
J	Ground Clearance - Front Axle	554 mm	(21. 81 in.)
K	Ground Clearance - Bin Fully Tipped	851 mm	(33. 5 in.)
L	Bin Lip Height - Transport Position	2 952 mm	(9 ft. 8 in.)
M	Bin Length	5 036 mm	(16 ft. 6 in.)
N	Load over Height	3 824 mm	(12 ft. 7 in.)
O	Rear Axle Centre to Bin Rear	2 477 mm	(8 ft. 2 in.)
P	Rear Axle Centre to Front Axle Centre	5 285 mm	(17 ft. 4 in.)
Q	Front Axle Centre to Machine Front	3 352 mm	(11 ft.)
R	Front Axle Centre to Artic Centre	1 558 mm	(5 ft. 1 in.)
S	Approach Angle	22 °	
T	Maximum Bin Tip Angle	55 °	
U	Maximum Articulation Angle	42 °	
V	Front Tie Down Height	1 263 mm	(4 ft. 2 in.)
W	Machine Lifting Centres	10 116 mm	(33 ft. 2 in.)
X	Inner Turning Circle Radius	4 246 mm	(13 ft.11 in.)
Y	Outer Turning Circle Radius	9 216 mm	(30 ft. 3 in.)

Gradeability/Rimpull

1. Determine tractive resistance by finding intersection of vehicle mass line and grade line. NOTE: 2% typical rolling resistance is already assumed in chart and grade line.
2. From this intersection, move straight right across charts until line intersects rimpull curve.
3. Read down from this point to determine maximum speed attained at that tractive resistance.

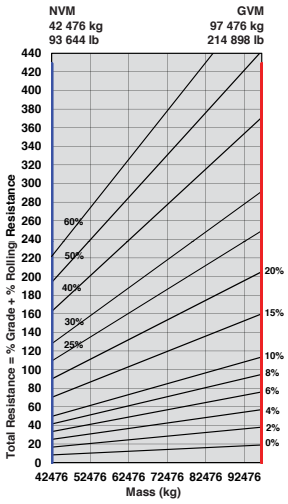

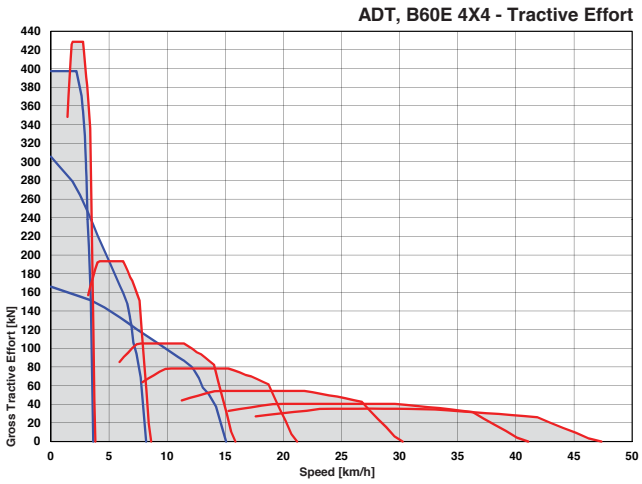

Retardation

1. Determine retardation force required by finding intersection of vehicle mass line.
2. From this intersection, move straight right across charts until line intersects the curve. NOTE: 2% typical rolling resistance is already assumed in chart.
3. Read down from this point to determine maximum speed.

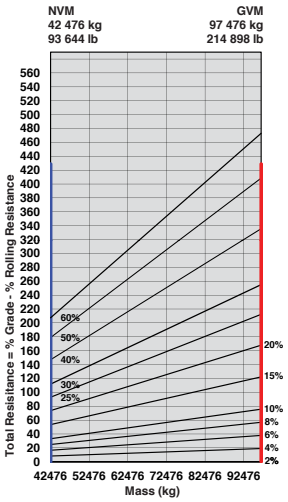

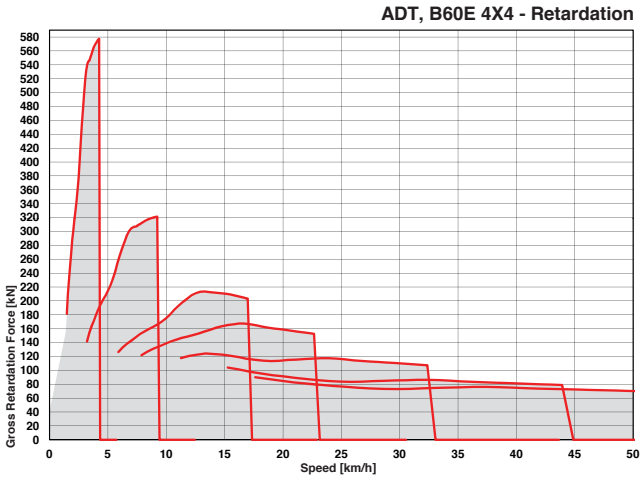

Features and Options

● STANDARD ▲ OPTION - NOT AVAILABLE

B30E 4x4	B45E 4x4	B60E 4x4	
			ENGINE
●	●	●	Engine valve brake
●	●	●	Dual element air cleaner with dust ejector valve
●	●	●	Pre-cleaner with automatic dust scavenging
●	●	●	Water separator
●	●	●	Serpentine drive belt with automatic tensioner
●	●	●	Provision for fast fill
	●	●	Wet-sleeve cylinder liners
			COOLING
●	●	●	Crankshaft mounted electronically controlled viscous fan drive
●	●	●	Fan guard
			PNEUMATIC SYSTEM
●	●	●	Engine-mounted compressor
●	●	●	Air drier with heater
●	●	●	Integral unloader valve
			ELECTRICAL SYSTEM
●	●	●	Battery disconnect
●	●		Halogen drive lights
	▲	●	LED drive lights
●	●	●	Air horn
●	●	●	Reverse alarm
▲	▲	▲	White noise reverse alarm
●	●	●	Rotating beacon
●	●	●	Pitch roll sensor
▲	●	●	Artic reverse light
●	●	●	Halogen reverse lights
		▲	LED reverse lights
			STEERING SYSTEM
●	●	●	Bi-directional ground-driven secondary steering pump
			CAB
●	●	●	ROPS/FOPS certification
●	●	●	Tilt cab
●	●	●	Gas strut-supported door
●	●	●	I-Tip programmable dump-body tip settings
●	●	●	HVAC Climate control system
●	●	●	AM/FM radio with Aux + USB
●	●	●	Rear window guard
●	●	●	Wiper/washer with intermittent control
●	●	●	Tilt and telescoping steering wheel
●	●	●	Center-mount air-suspension seat
●	●		Forward work lights
▲	▲	●	LED work lights
▲	▲	▲	Rotating beacon: seat belt installation
▲	▲	▲	Remote engine and machine isolation
▲	●	●	Remote battery jump start
●	●	●	Retractable 3 point seat belt
●	●	●	Heated seat
●	●	●	Foldaway trainer seat with retractable seat belt
●	●	●	12-volt power outlet
●	●	●	Cab utility bin (removable)
●	●	●	Cup holder
●	●	●	Cooled/heated lunch box
		●	Manually adjusted mirrors

B30E 4x4	B45E 4x4	B60E 4x4	
			CAB (continued)
		▲	Heated mirrors
●	●		Electric adjustable and heated mirrors
●	●	●	Deluxe 10” color LCD: Speedometer / Fuel gauge / Transmission oil temperature gauge / Engine coolant temperature gauge / LED function/warning indicators and audible alarm / Transmission gear selection / Tachometer / Battery voltage / Hour meter / Odometer / Fuel consumption / Tip counter / Trip timer / Trip distance / Metric/English units / Service codes/diagnostics
●	●	●	Backlit sealed switch module functions with: Wiper control / Lights / Heated mirrors / Retarding aggressiveness / Transfer case differential lock / Transmission gear hold / Dump-body tip limit / Automatic dump-body tip settings / Air conditioner/ Heater controls / Preselected Speed Control
			DUMP BODY
●	●	●	Dump body mechanical locks (x2). Partially up and fully up
▲	▲	▲	Body liner
▲	▲	▲	Tailgate
▲	▲	▲	Body heater
▲	▲	▲	Less dump body and cylinders
	▲	▲	Bin pole lockout
		▲	Rear wheel mudguards
			OTHER
●	●	●	Automatic Traction Control (ATC)
●	●	●	Wet disc brakes
●			23.5 R25 Radial Earthmover tyres (Front)
	●		26.5 R25 Radial Earthmover tyres (Front)
	●		775/65 R29 Radial Earthmover tyres (Front-optional)
●			29.5 R25 Radial Earthmover tyres (Rear)
	●		21.00 R35 Dual (Rear)
●	●		Remote grease banks
▲	▲	●	Automatic greasing
▲	●	●	Onboard Weighing
▲	▲	●	Load lights: stack
▲	▲	●	Comfort ride suspension (Front)
▲	▲	●	Comfort ride suspension (Rear)
▲	●	●	Reverse camera
▲	●	●	Hand rails
●	●	●	Cab peak
▲	▲	▲	High pressure hydraulic filter
▲	▲	▲	Fuel heater
●	●	●	Belly cover
●	●	●	Cross member cover
▲	▲	●	Remote transmission filters
●	●	●	Engine and transmission remote drain-gravity
	▲	▲	Engine and transmission remote drain-scavenge
▲	▲	▲	Window smash button
●	●	●	High visibility mirrors
●	●	●	Fleetm@tic® Classic Package for 2 years

All dimensions are shown in millimeters, unless otherwise stated between brackets.
Under our policy of continuous improvement, we reserve the right to change technical data and design without prior notice. Photographs featured in this brochure may include optional equipment.
Blu@dvantage™ is a trademark of Bell Equipment Co. (PTY) Ltd
AdBlue® is a registered trademark of VDA

BELL INTERNATIONAL: Tel: +27 (0)35-907 9431
E-mail: marketing@bellequipment.com Web: www.bellequipment.com

Tel: +61 (0)8 9355 2442
Tel: +49 (0)6631 / 91 13 0
Tel: +27 (0)11 928 9700
Tel: +44 (0)1283 712862
Tel: +33 (0)5 55 89 23 56
Tel: +7 495 287 80 02
Tel: (704) 655 2802

Strong Reliable Machines
Strong Reliable Support

BELL

1339-Broch22370219, ADT 4x4 Mk 2.1, Stage IV - English